Cod. 57090000

905 x 460 x 800 mm

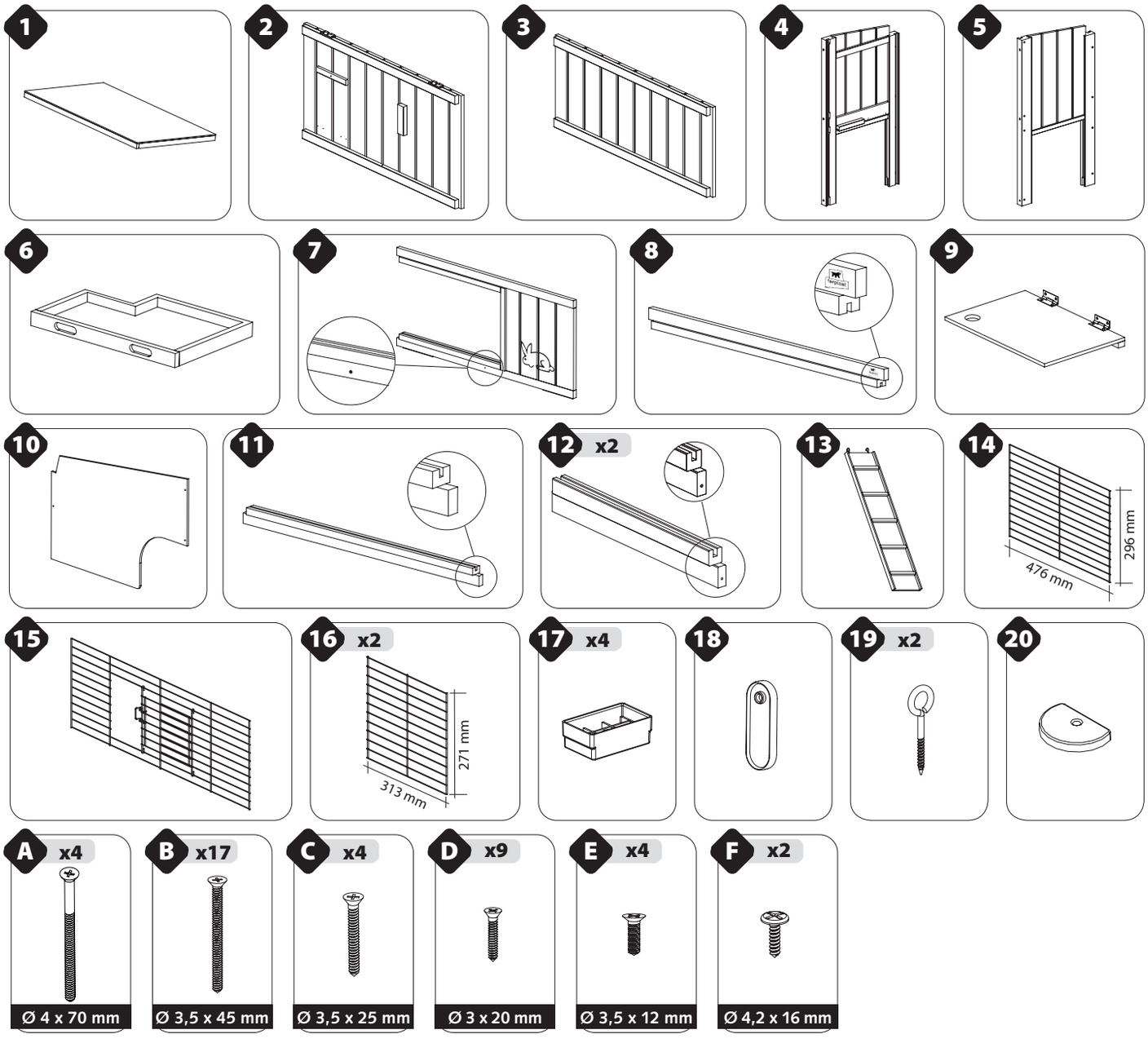

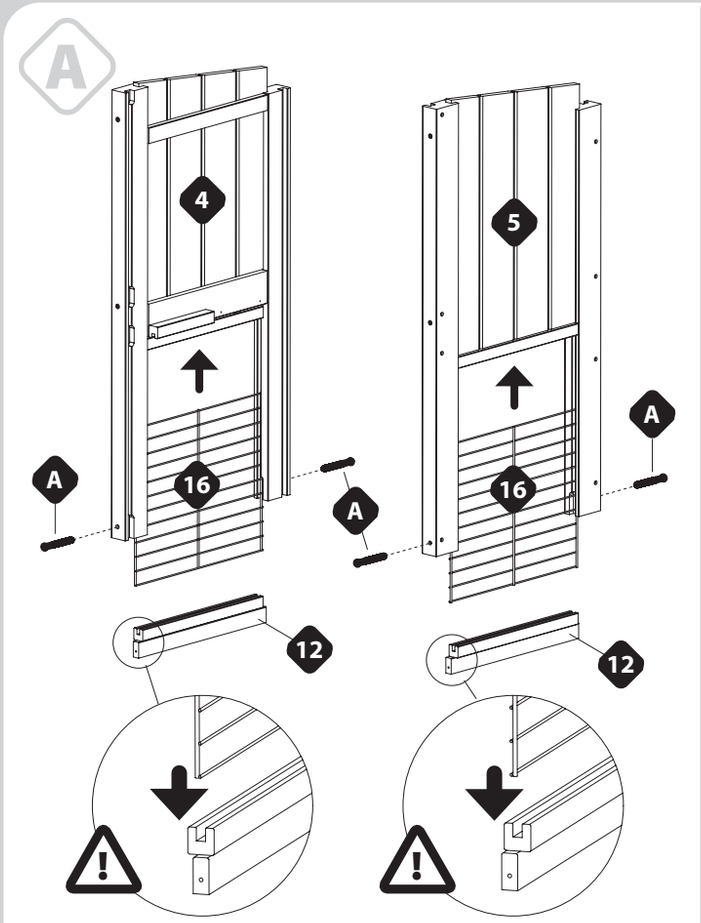
A
4
5
16
16
A
A
A
12
12

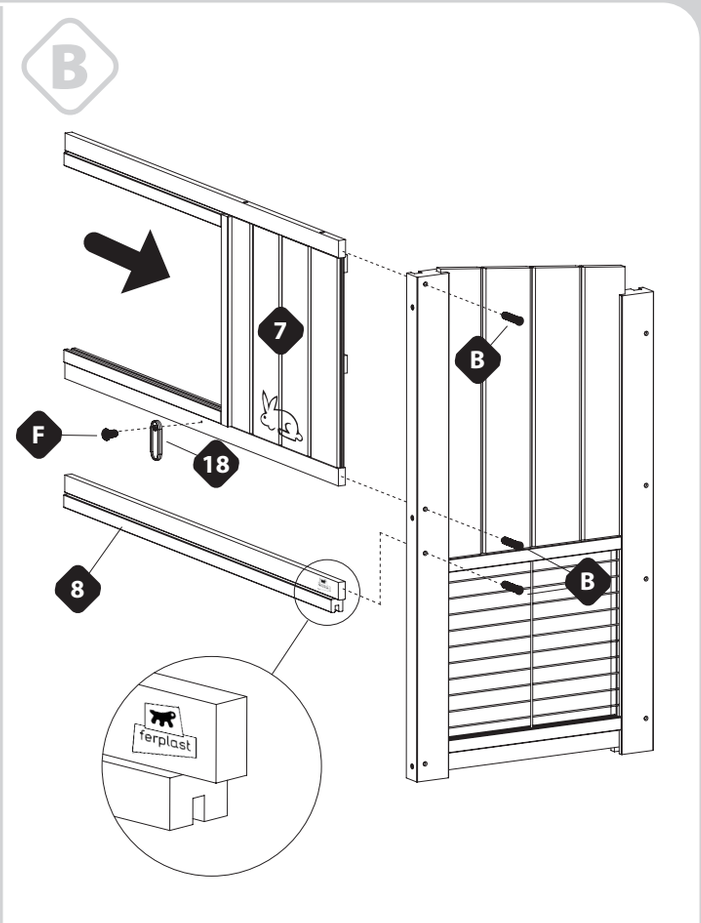
B
7
B
F
18
8
B
ferplast

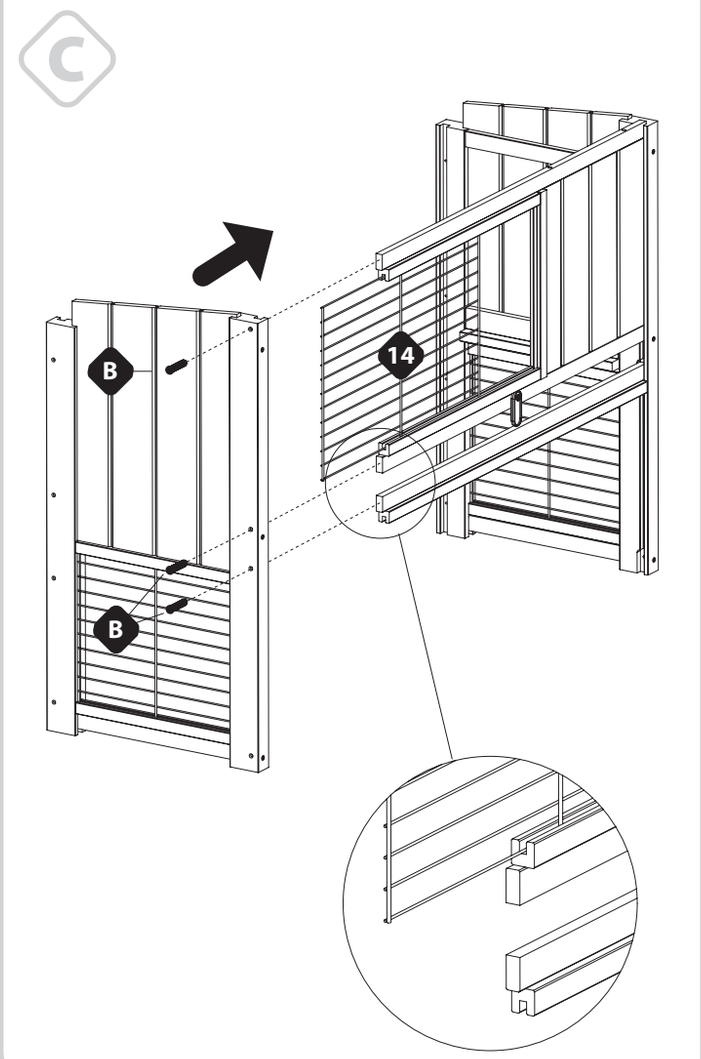
C
B
14
B

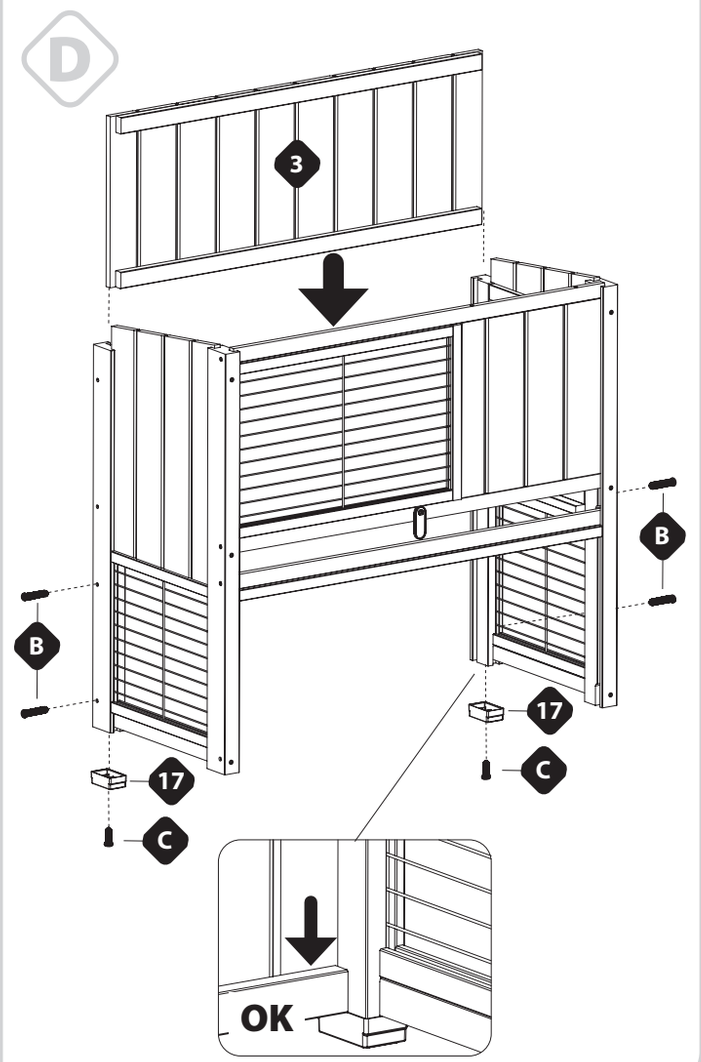
D
3
B
B
17
C
17
C
OK

E

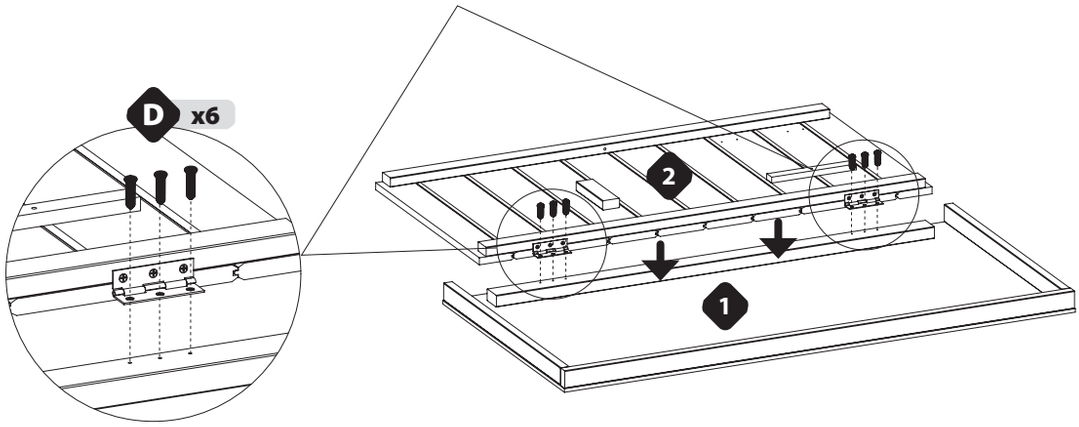

F

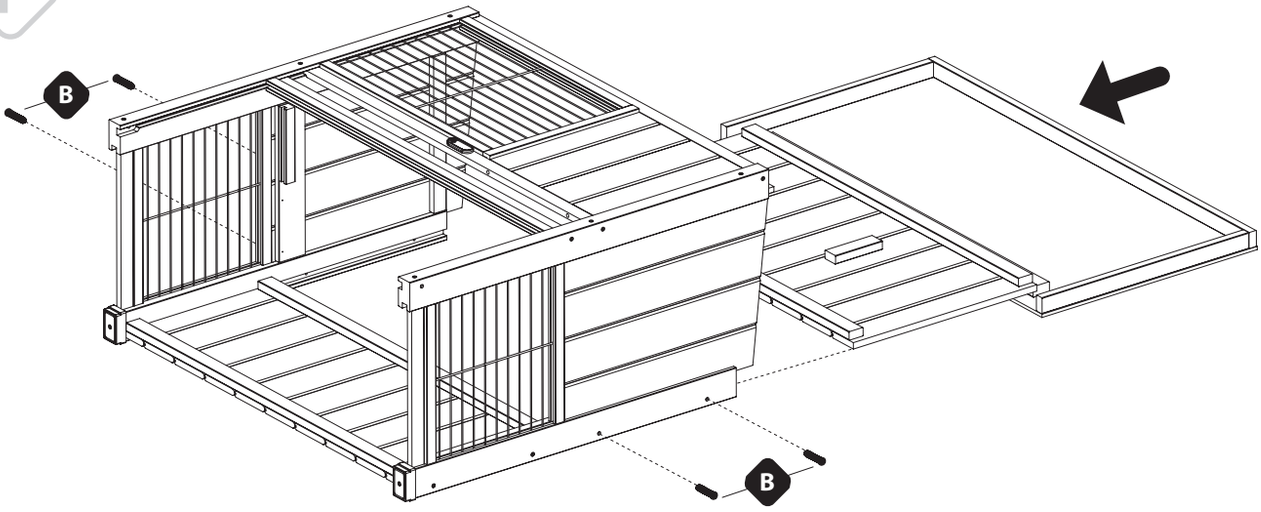

G

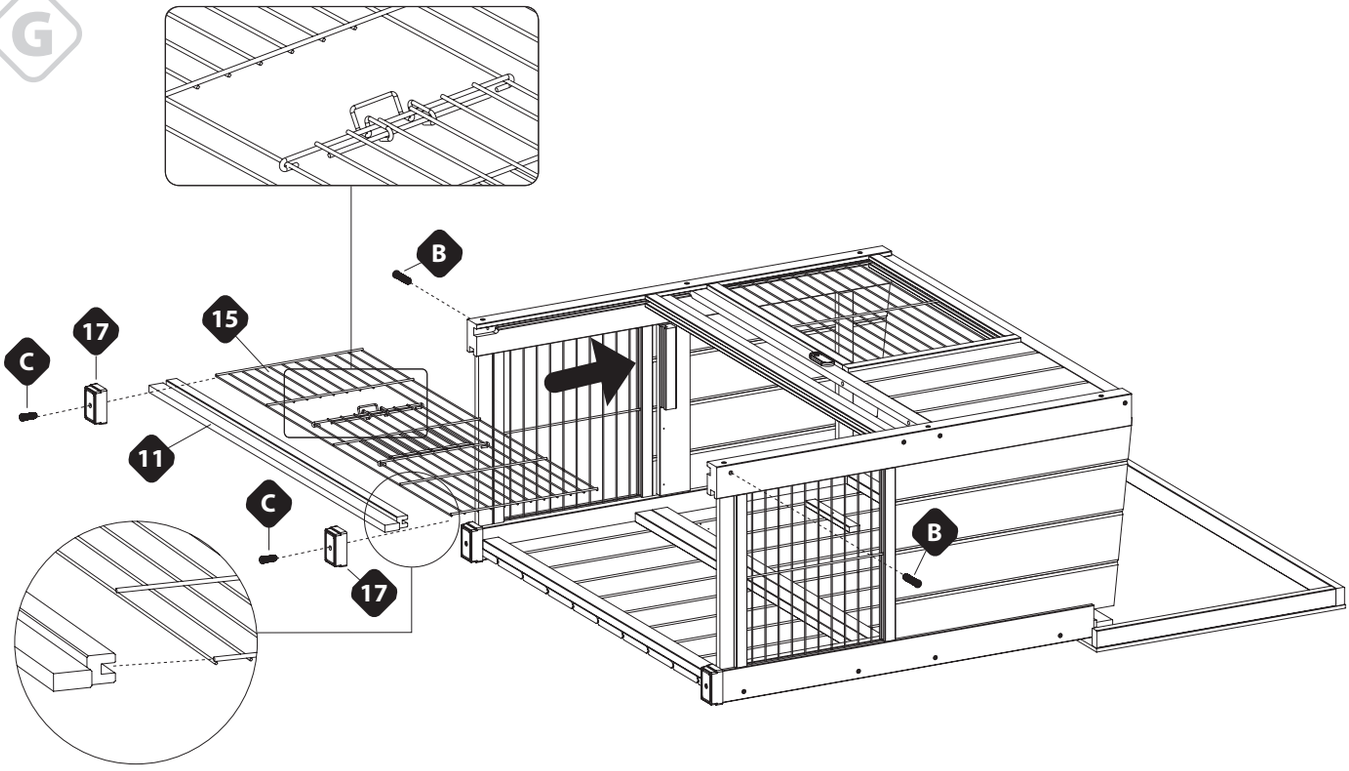

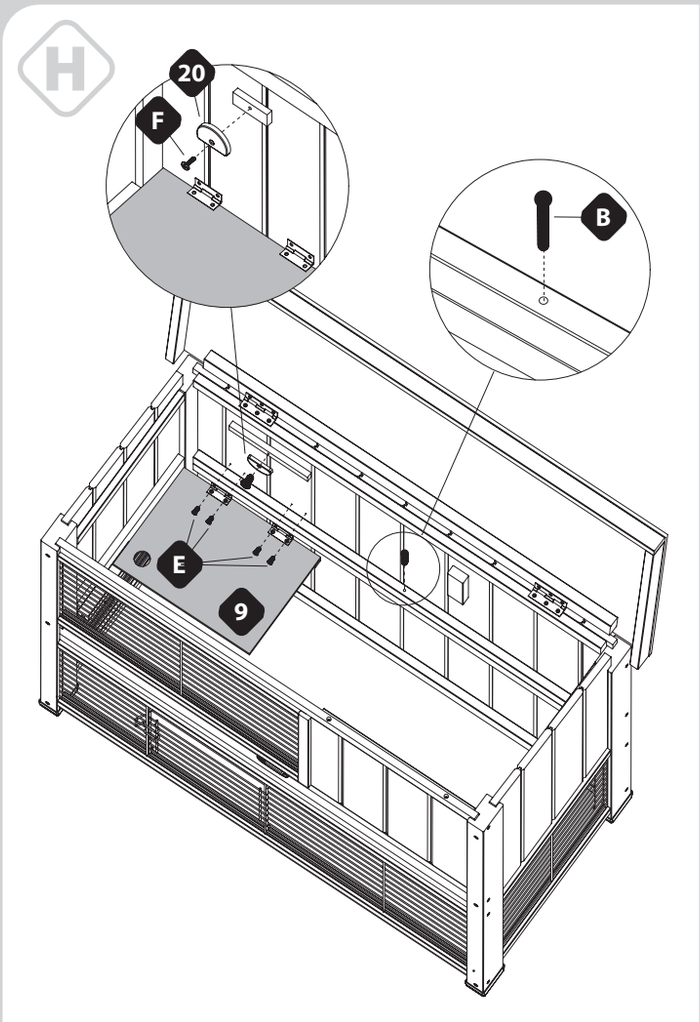

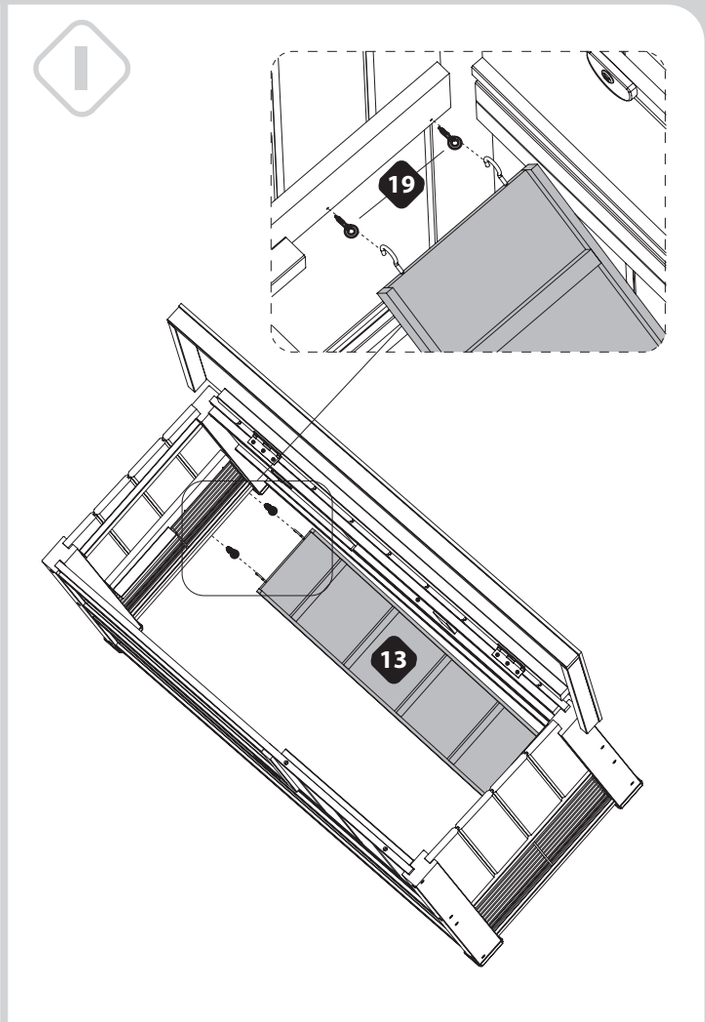

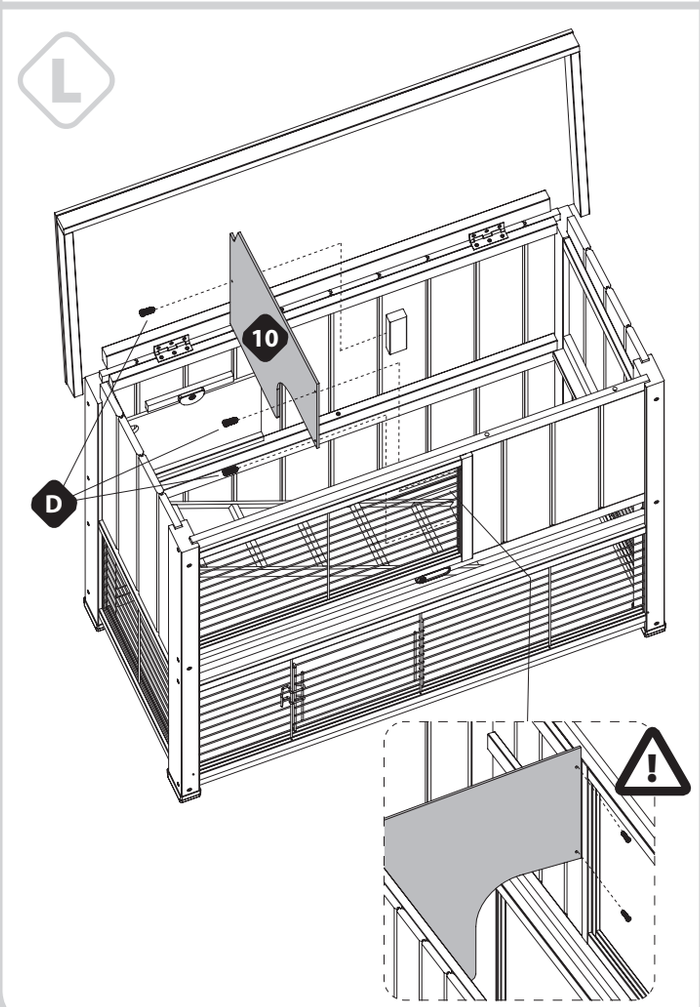

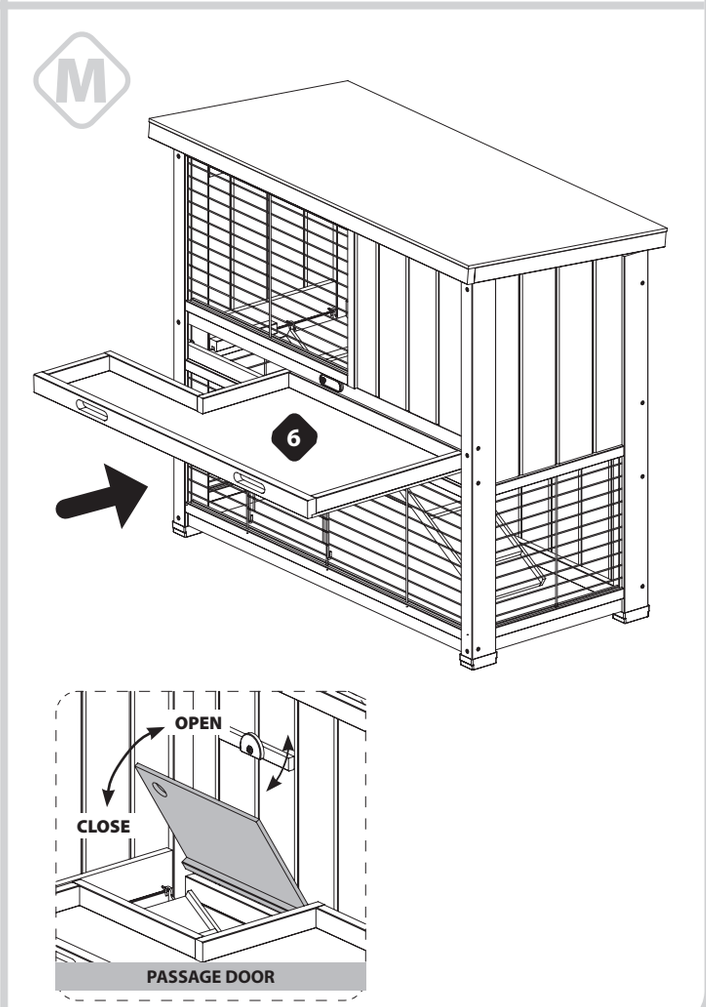

197197-2